Ecolux

Lador Cluster Column

monteringsanvisning

Produced by LIGMAN

Måttskiss

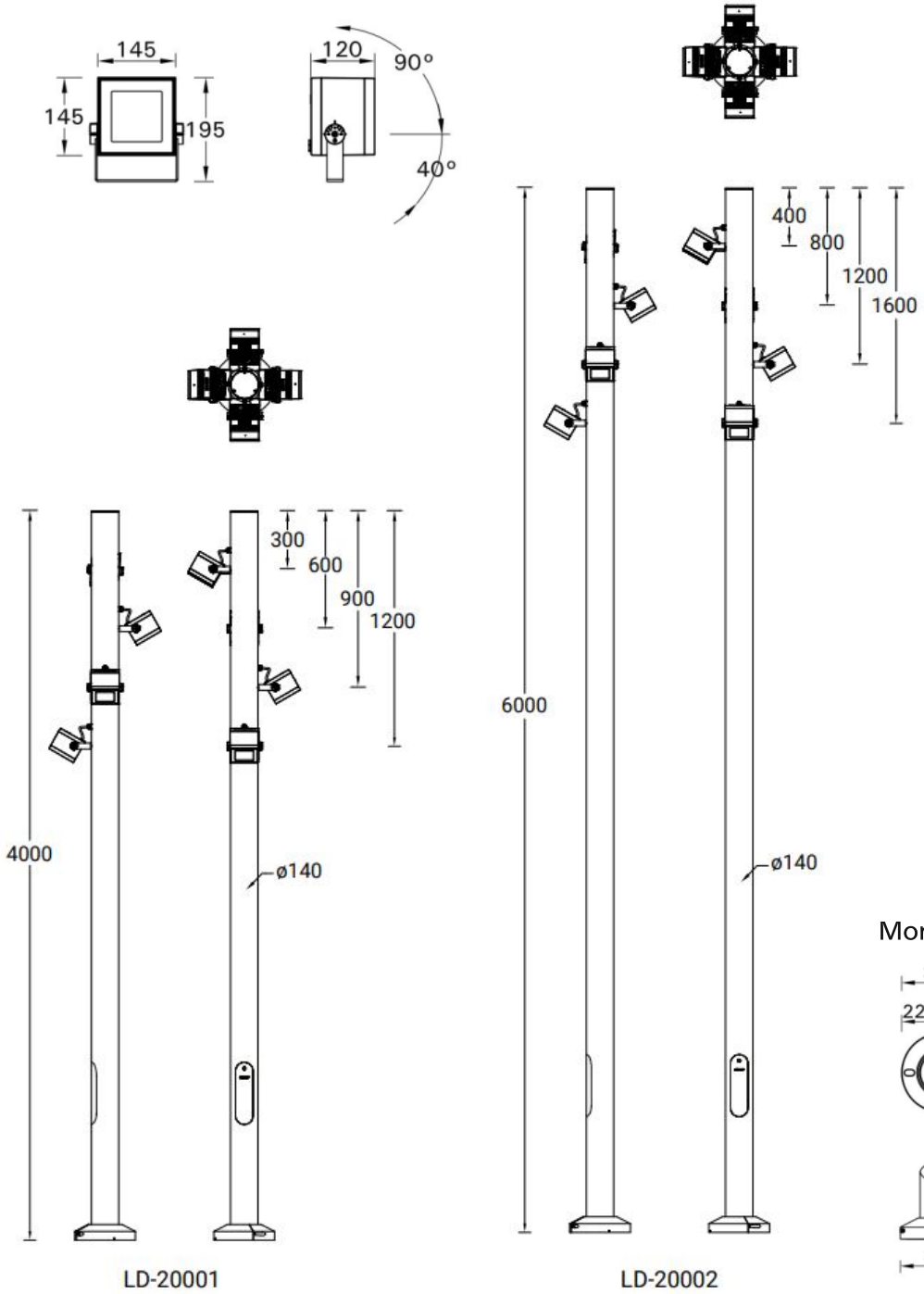

Monteringsdetalj

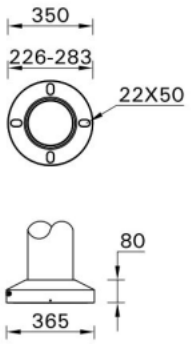

Tillbehör

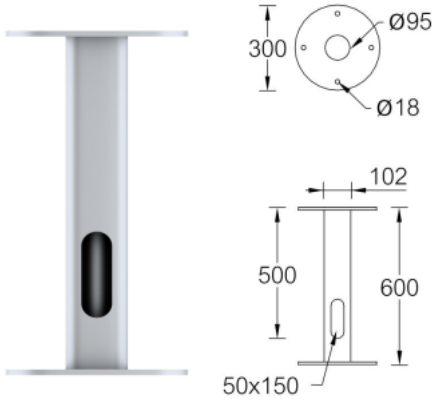

Root mount kit -**A20691**

Montage

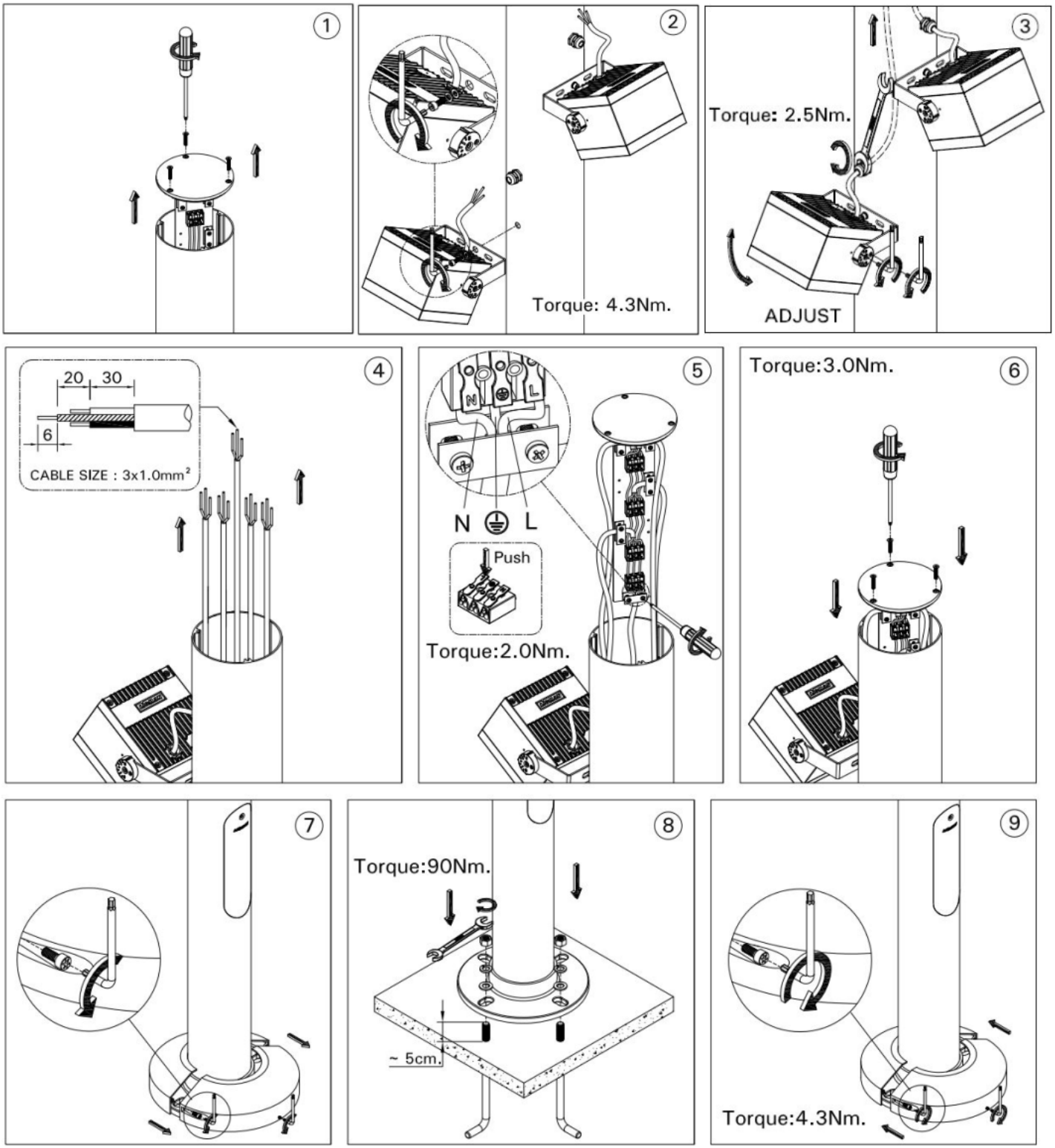
1
2
Torque: 4.3Nm.
3
Torque: 2.5Nm.
ADJUST
4
20
30
6
CABLE SIZE : 3x1.0mm²
5
N
L
Push
Torque:2.0Nm.
Torque:3.0Nm.
6
7
8
Torque:90Nm.
~ 5cm.
9
Torque:4.3Nm.

Montage Root Mount Kit

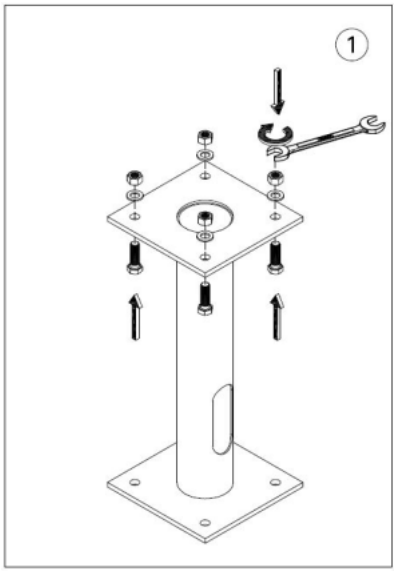

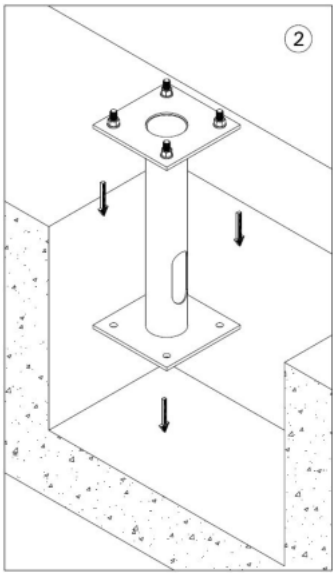

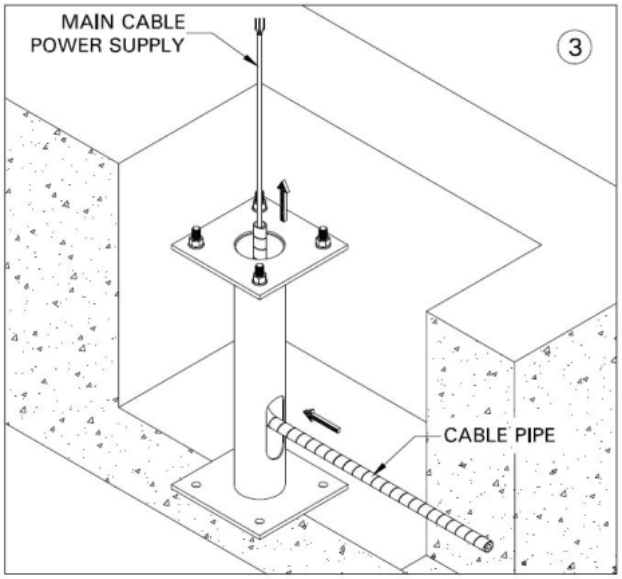

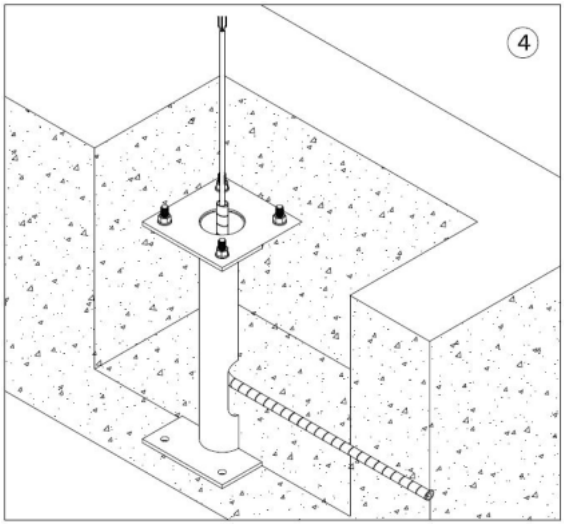

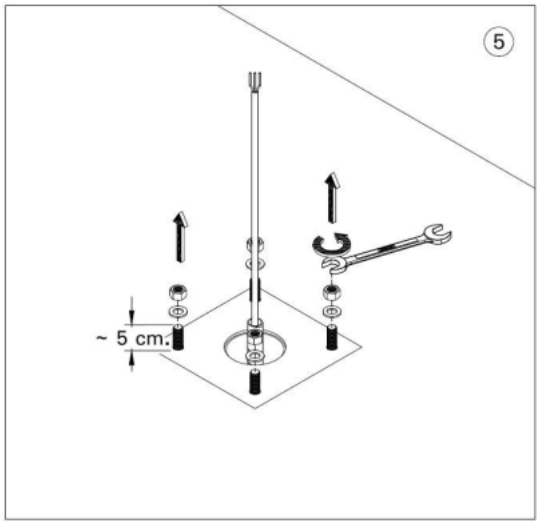

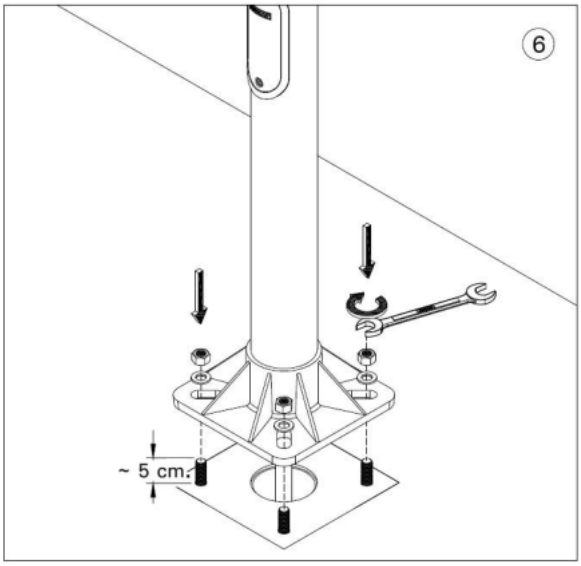

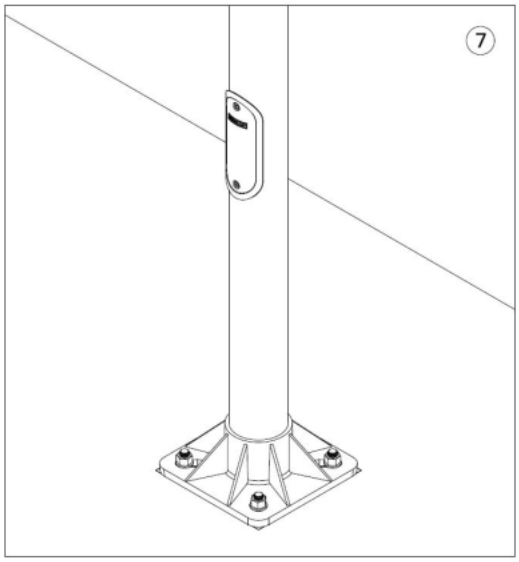

ecolux®

when light matters

Ecolux AB | Box 73 | 265 21 ÅSTORP | Tel: 010-130 11 00 | E-post: info@ecolux.se

Vi reserverar oss för eventuella tryckfel.